Double Row Angular Contact Ball Bearings 3000A Series angular contact ball bearings-3210A

WUXI GUANGQIANG BEARING TRADE CO.,LTD

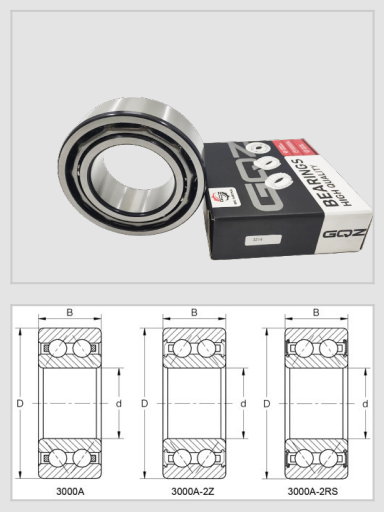

Designation	**3210A**
Principal Dimensions(mm)	
d	50
D	90
B	30.2
Basic Load Ratings(KN)	
Dynamic(Cr)	43.2
Static(Cor)	35.3
Limited Speed(rpm)	
Grease	4500
Oil	6000
Weight (kg)	0.78

GQZ bearings wholesale high quality 3000A Series Double Row Angular Contact Ball Bearings

Angular contact ball bearings have inner and outer ring raceways that are displaced relative to each other in the direction of the bearing axis. This means that these bearings are designed to accommodate combined loads, i.e. simultaneously acting radial and axial loads.

The axial load carrying capacity of angular contact ball bearings increases as the contact angle increases. The contact angle is defined as the angle between the line joining the points of contact of the ball and the raceways in the radial plane, along which the combined load is transmitted from one raceway to another, and a line perpendicular to the bearing axis.

The dimensions of the 3000A series bearings are 10mm inner diameter, 26mm outer diameter and 12mm thickness.

GQZ
BEARING

GQZ
BEARING

Wuxi Guangqiang Bearing Trade Co.,Ltd-Tel:86-510-82601571-
Email:gq@gqbearing.com,shary@gqbearing.com-http://www.bearing-asia.com